1460B

| REVISIONS | | | | | |
|---|---|---|---|---|---|
| REV. | DESCRIPTION | ECO# | DATE | DRFTR | APPR'VD |
| PR | PRODUCTION RELEASE | | 01-16-10 | MH | SB |

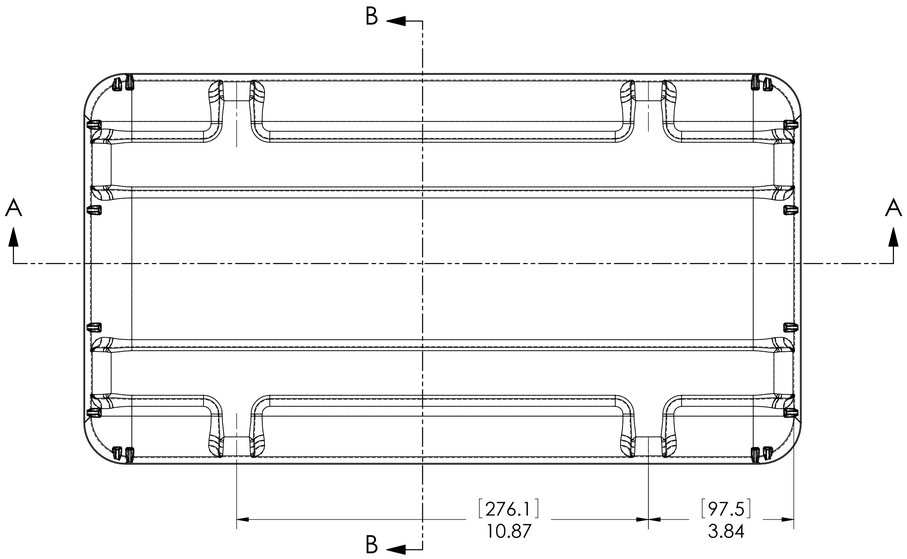


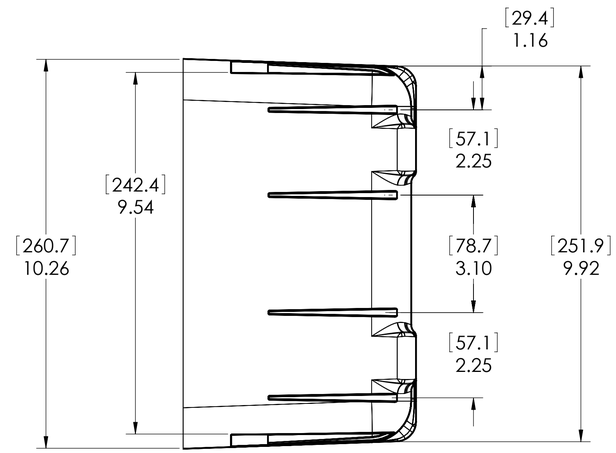


SECTION B-B
SCALE 1 : 2

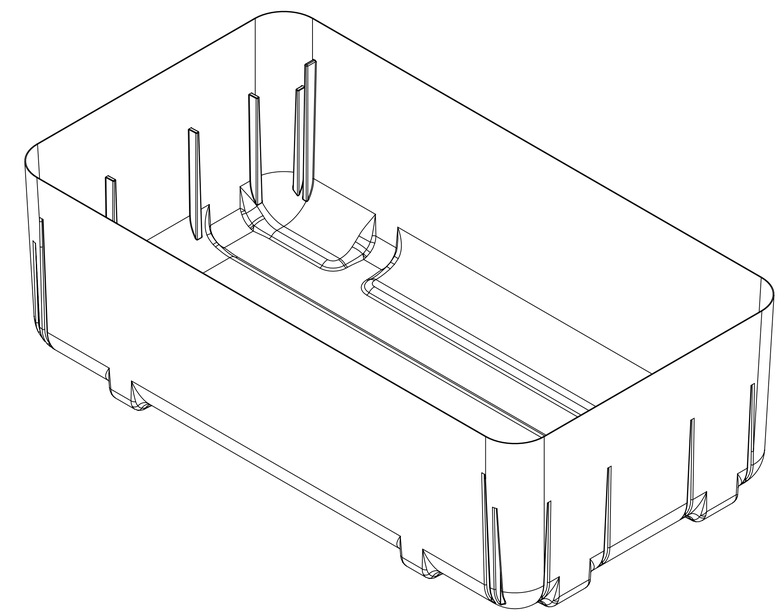

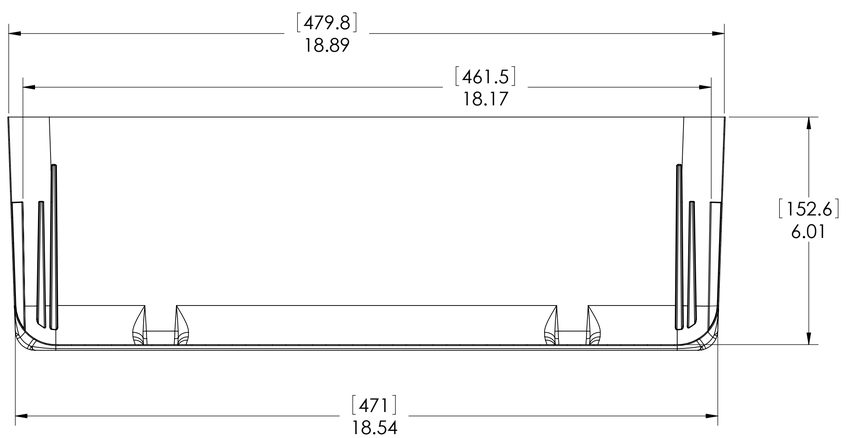


SECTION A-A
SCALE 1 : 2

2- DIMENSIONS IN [ XX ] ARE MM.
1- ALL DIMENSIONS ARE TO INTERNAL GEOMETRY OF CASE.
NOTES: UNLESS OTHERWISE SPECIFIED.

PELICAN™
You break it, we replace it... forever.

UNSPECIFIED TOLERANCES

| APPROVALS | DATE |
|---|---|
| DESIGN XX | XXXX |
| CHECKED | |
| APPROVED | |

This Drawing contains information proprietary to Pelican Products Inc. Any reproduction, disclosure or use of this drawing requires written the permission of Pelican Products Inc.

DO NOT SCALE DRAWING

**PELICAN PRODUCTS INC.**
23215 EARLY AVE., TORRANCE, CA 90505 (310) 326-4700

TITLE: 1460 BOTTOM INTERNAL GEOMETRY

| SIZE | SCALE | DRAWING NO | REV |
|---|---|---|---|
| D | 1:1 | 1461-931B-CLR<br>1461-932B-CLR | PR |

SHEET 1 OF 1

| REVISIONS | | | | | |
|---|---|---|---|---|---|
| REV. | DESCRIPTION | ECO# | DATE | DRFTR | APPR'VD |
| PR | PRODUCTION RELEASE | | 02-16-10 | MH | SB |

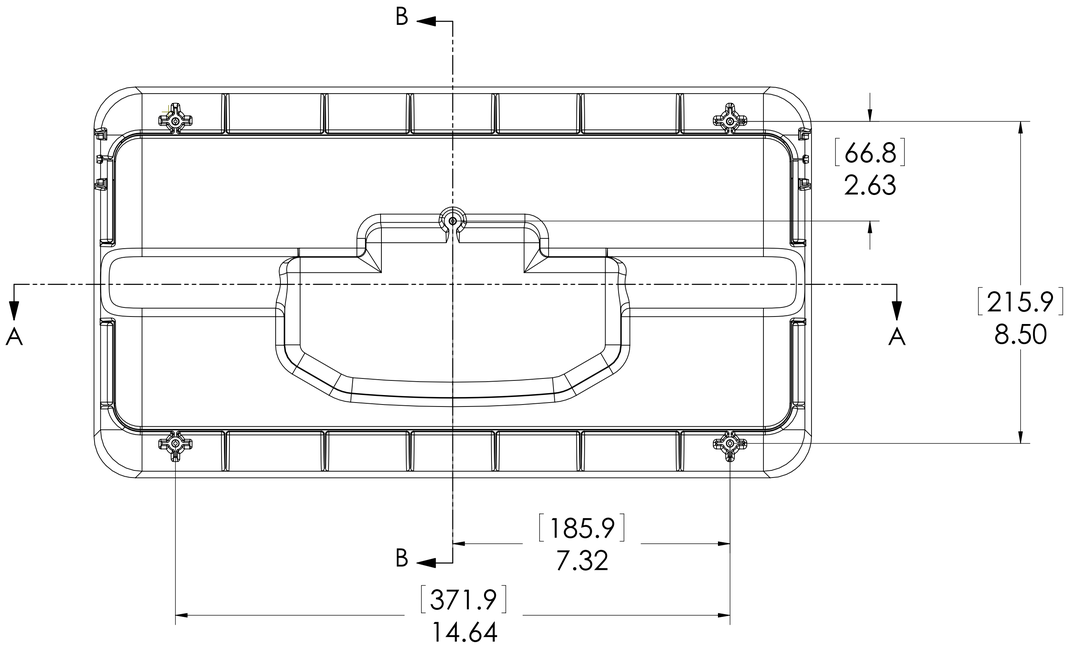


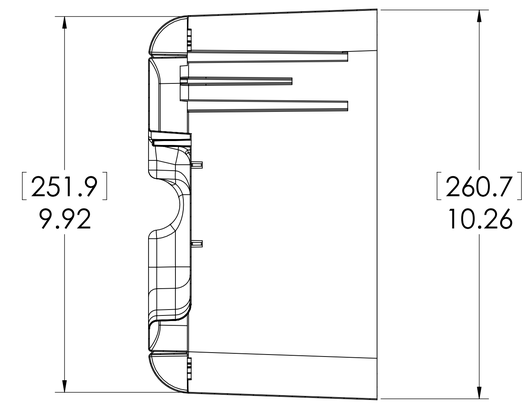


SECTION B-B

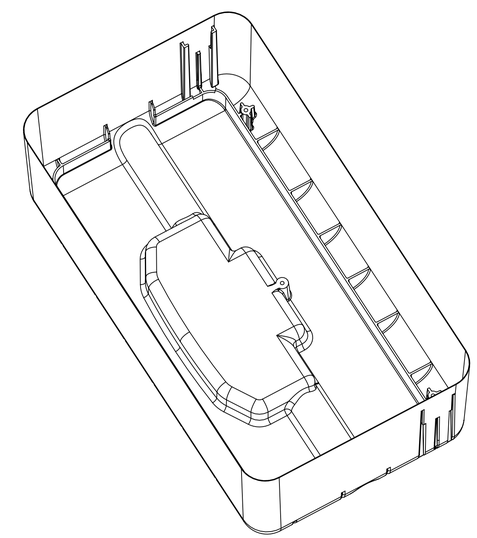

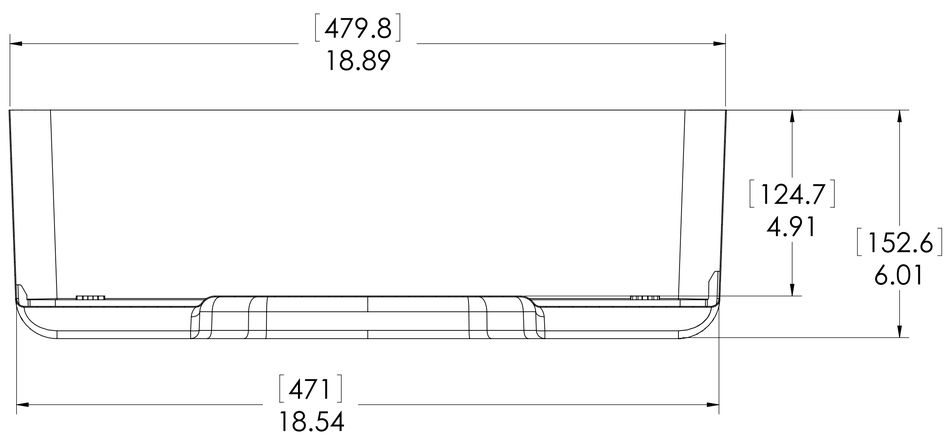


SECTION A-A

2- DIMENSIONS IN [ XX ] ARE MM.
1- ALL DIMENSIONS ARE TO INTERNAL GEOMETRY OF CASE.
NOTES: UNLESS OTHERWISE SPECIFIED.

PELICAN™
You break it, we replace it... forever.

UNSPECIFIED TOLERANCES

| APPROVALS | | DATE |
|---|---|---|
| DESIGN | XX | XXXX |
| CHECKED | | |
| APPROVED | | |

This Drawing contains information proprietary to Pelican Products Inc. Any reproduction, disclosure or use of this drawing requires written the permission of Pelican Products Inc.

**PELICAN PRODUCTS INC.**
23215 EARLY AVE., TORRANCE, CA 90505 (310) 326-4700

TITLE: 1460 TOP INTERNAL GEOMETRY

| SIZE | SCALE | DRAWING NO. | REV |
|---|---|---|---|
| D | 1:2 | 1461-931T-CLR<br>1461-932T-CLR | PR |

DO NOT SCALE DRAWING

SHEET 1 OF 1